VAMP-WN19M-R-TPM9

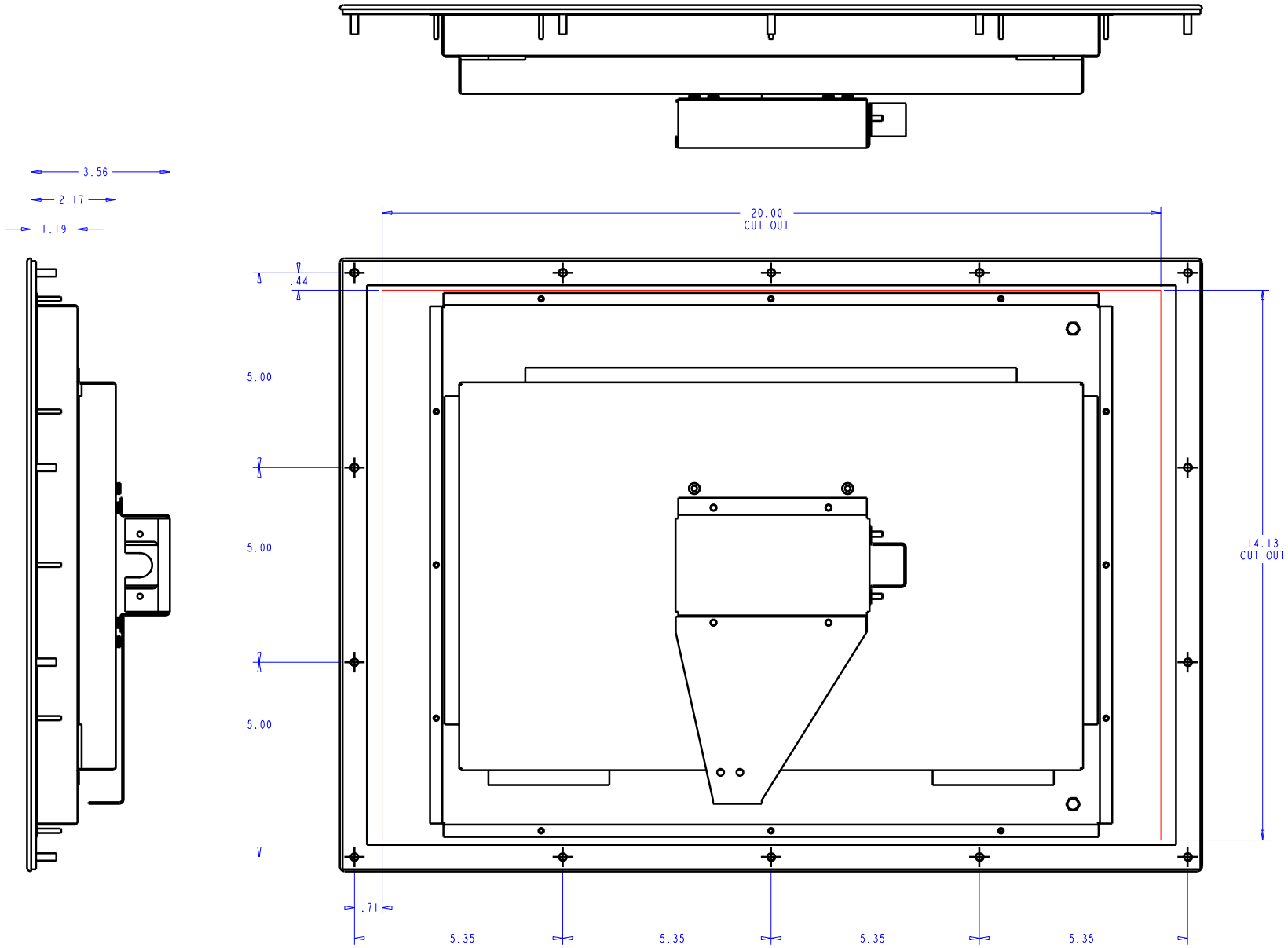

Measurements shown in mm. All Dimensions are ±0.5 mm.

Computer DYNAMICS

A GE Intelligent Platforms Company

NOTE: This is a simplified drawing and some components are not marked in detail. Please contact your Applications Engineer for additional product information.

©2011 Computer Dynamics, Inc. Computer Dynamics, Inc. is a wholly-owned subsidiary of GE Intelligent Platforms. All rights reserved. Specifications are subject to change without notice.